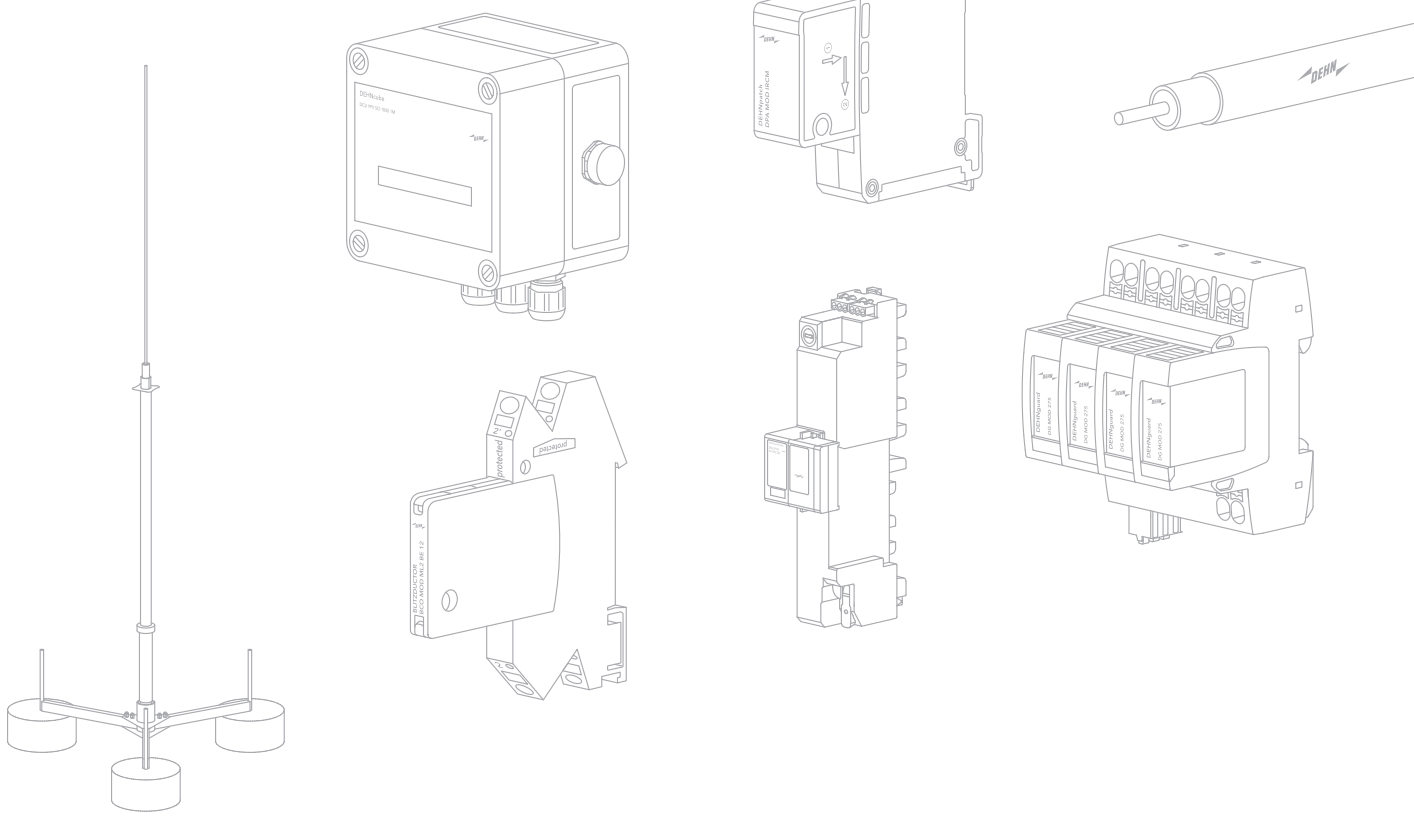

AEO Confirmation

→ **Authorization Holder**
DEHN SE
Hans-Dehn-Straße 1
DE-92318 Neumarkt i.d.OPf.

→ **Authorization Number**
DE AEOF 131537

→ **Authorised Economic Operator**
Customs Simplifications / Security

→ **Validity**
Date of Certification:
02-27-2022

Date of Initial Certification:
05-17-2016

→ **Contact Person**
Benjamin Goetz